Operating instructions

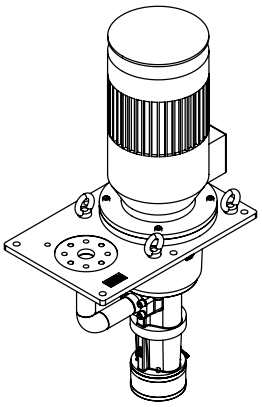

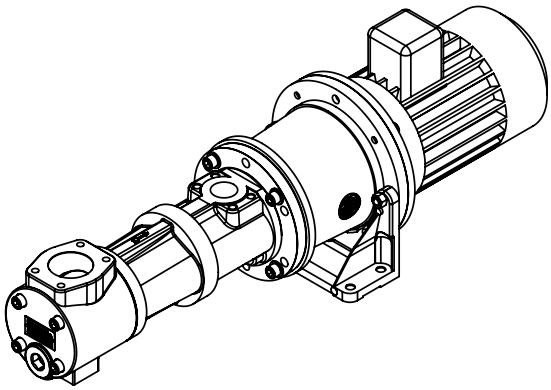

KRAL screw pumps.

Series C / Type CKC

Radial shaft seal

OIC 01en-GB
Edition 2022-03
Original instructions

Table of contents

1 About this document ... 3
1.1 General information ... 3
1.2 Associated documents ... 3
1.3 Target groups ... 3
1.4 Symbols ... 3
1.4.1 Danger levels ... 3
1.4.2 Danger signs ... 4
1.4.3 Symbols in this document ... 4

2 Safety ... 5
2.1 Proper use ... 5
2.2 Foreseeable misuse ... 5
2.3 Obligations of the operator-owner ... 5
2.4 Safety instructions ... 5
2.4.1 Fundamental safety instructions ... 5

3 Identification ... 6
3.1 Type code ... 6
3.2 Rating plate ... 6

4 Technical data ... 7
4.1 Operating limits ... 7
4.2 Limit values for tank installation ... 8
4.3 Required NPSH values ... 9
4.4 Sound pressure level ... 9
4.5 Weights ... 9

5 Function description ... 10
5.1 Pump structure ... 10
5.2 Functional principle ... 10
5.3 Overflow valve ... 11

6 Transportation, storage ... 12
6.1 Dangers during transportation ... 12
6.2 Dangers during storage ... 12
6.3 Unpacking and checking the state of delivery ... 12
6.4 Transporting the pump/pump unit ... 12
6.5 Storing the pump ... 13

7 Preservation ... 14
7.1 Preservation table ... 14
7.2 Preserving the inner surfaces ... 14
7.3 Preserving the outer surfaces ... 14
7.4 Removing the preservation ... 14

8 Installation, removal ... 15
8.1 Dangers during installation ... 15
8.2 Dangers during removing ... 15
8.3 Installing the pump ... 15
8.4 Removing the pump ... 17

9 Connection ... 18
9.1 Dangers during connection work ... 18
9.2 Connecting the pump to the pipe system ... 18
9.3 Insulating the pump ... 19
9.4 Assembling the pump and motor ... 19
9.5 Connecting the pump unit to the power supply ... 20

10 Operation ... 20
10.1 Dangers during operation ... 20
10.2 Commissioning ... 20
10.2.1 Cleaning the pipe system ... 20
10.2.2 Filling the pump ... 21
10.2.3 Checking the direction of rotation ... 21
10.2.4 Commissioning the pump ... 22
10.3 During operation ... 23
10.3.1 Checking the operating pressure ... 23
10.3.2 Monitoring the filter and/or strainer ... 24
10.3.3 Adjusting the overflow valve ... 24
10.3.4 Switching off the pump unit ... 25
10.4 Decommissioning ... 25
10.4.1 Decommissioning the pump ... 25
10.5 Recommissioning ... 26
10.5.1 Recommissioning the pump ... 26

11 Maintenance ... 26
11.1 Dangers during maintenance ... 26
11.2 Required maintenance ... 26
11.3 Ball bearing (inner bearing) ... 26
11.4 Maintaining the pump ... 27

12 Servicing ... 27
12.1 Dangers during servicing ... 27
12.2 Wear ... 27
12.2.1 Signs of wear ... 27
12.3 Replacing the coupling ... 28
12.3.1 Removing the coupling ... 28
12.3.2 Installing the coupling ... 29
12.4 Replacing the radial shaft seal ... 30
12.4.1 Removing the radial shaft seal ... 30
12.4.2 Installing the radial shaft seal ... 30
12.5 Replacing the ball bearing ... 31
12.5.1 Removing the ball bearing ... 31
12.5.2 Installing the ball bearing ... 31

13 Disposal ... 32
13.1 Dismantling and disposing of the pump ... 32

14 Troubleshooting ... 33
14.1 Possible faults ... 33
14.2 Troubleshooting ... 33

15 Spare parts ... 36
15.1 Overview ... 36
15.2 Maintenance kits ... 36
15.2.1 Standard or high-temperature radial shaft seal maintenance kit ... 36
15.3 Repair kits ... 37
15.3.1 Repair kit, overflow valve ... 37
15.4 Attachment parts ... 38
15.4.1 Overview of accessories ... 38
15.5 Tool sets ... 38
15.5.1 Tool set, radial shaft seal ... 38

16 Appendix ... 39
16.1 Tightening torques for screws with metric screw threads with and without wedge lock washers ... 39
16.2 Tightening torques for screw plugs with thread measured in inches and elastomer seal ... 39
16.3 Contents of the Declaration of Conformity ... 40

1 About this document

1.1 General information

These instructions form part of the product and must be kept for future reference. Furthermore please observe the associated documents.

1.2 Associated documents

- ☐ Declaration of conformity according to EU Directive 2006/42/EC
- ☐ Manufacturer's declaration according to EU Directive 2014/68/EU
- ☐ Data sheet of the pump
- ☐ Technical documentation of the supplied components

1.3 Target groups

The instructions are intended for the following persons:

- ☐ Persons who work with the product
- ☐ Operator-owners who are responsible for the use of the product

Persons who work with the product must be qualified. The qualification ensures that possible dangers and material damage that are connected to the activity are detected and avoided. These persons are qualified personnel who carry out the work properly due to their training, knowledge and experience and on the basis of the relevant provisions.

Information on the required qualification of the personnel is provided separately at the beginning of the individual chapters in these instructions. The following table provides an overview.

Target group	Activity	Qualification
Transport personnel	Transporting, unloading, setting up	Qualified personnel for transport, mobile crane operators, crane operators, forklift operators
Fitter	Mounting, connection	Qualified personnel for mounting
Electrician	Electrical connection	Qualified personnel for electric installation
Trained personnel	Delegated task	Personnel trained by the operator-owner who know the task delegated to them and the possible dangers arising through improper behaviour.

Tab. 1: Target groups

1.4 Symbols

1.4.1 Danger levels

	Signal word	Danger level	Consequences of non-observance
	DANGER	Immediate threat of danger	Serious personal injury, death
	WARNING	Possible threat of danger	Serious personal injury, invalidity
	CAUTION	Potentially dangerous situation	Slight personal injury
	ATTENTION	Potentially dangerous situation	Material damage

1.4.2 Danger signs

	Meaning	Source and possible consequences of non-observance
	Electrical voltage	Electrical voltage causes serious physical injury or death.
	Raised load	Falling objects can result in serious physical injury or death.
	Heavy load	Heavy loads can result in serious back problems.
	Risk of slipping	Discharging pumped liquid and oils on the foundation or tread surfaces can cause falls with serious physical injury or death.
	Flammable substances	Discharging pumped liquid and oils can be easily inflammable and can result in serious burns.
	Hot surface	Hot surfaces can cause burns.

1.4.3 Symbols in this document

	Meaning
	Warning personal injury
	Safety instruction
	Request for action
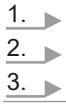	Multi-step instructions for actions
⇨	Action result
	Cross-reference

2 Safety

2.1 Proper use

- ☐ Use the pump solely for transporting lubricating liquids that are chemically neutral and that do not contain gas or solid components.
- ☐ Use the pump only within the operating limits specified on the rating plate and in the chapter "Technical data". In the case of operating data that do not agree with the specifications on the rating plate, please contact the manufacturer.
- ☐ The pump is designed specially for the operating pressure named by the customer. If the actual operating pressure deviates notably from this design pressure, damage to the pump can also arise within the specified operating limits. This applies both to notably higher as well as to notably lower operating pressures. Under no circumstances may the minimum pressure lie below 2 bar. In case of any doubt, please contact the manufacturer.

2.2 Foreseeable misuse

- ☐ Any use that extends beyond the proper use or any other use is misuse.
- ☐ The product is not suitable for pumping liquids outside the operational limits.
- ☐ Any bypassing or deactivation of safety equipment during operation is prohibited.

2.3 Obligations of the operator-owner

The operator-owner is the person who operates the product commercially or permits a third party to use it and who bears the legal responsibility for the product, the protection of the personnel and third parties during its operation.

The product is used in industrial applications. The operator-owner is therefore subject to the statutory obligations concerning occupational health and safety.

In addition to the safety instructions in these instructions, the regulations on safety, accident prevention and environmental protection respectively valid for the range of application of the product are to be observed.

2.4 Safety instructions

2.4.1 Fundamental safety instructions

The following safety instructions must be observed strictly:

- ☐ Read these operating instructions carefully and observe them.
- ☐ Read the operating instructions of the components carefully and observe them.
- ☐ Have work only carried out by qualified personnel/trained personnel.
- ☐ Wear personal protective equipment and work carefully.
- ☐ Pumped liquids can be subject to high pressure and can result in personal injury and damage to property in case of incorrect operation or damaged components.
- ☐ Pumped liquids can be hot, poisonous, combustible and caustic. Use corresponding protective equipment.
- ☐ Observe the associated data sheets and safety regulations when handling dangerous materials.
- ☐ Avoid skin contact with system parts carrying liquids at operating temperatures exceeding 60 °C.
- ☐ Collect any discharging pumped liquid safely and dispose of it in an environmentally compatible manner in accordance with the applicable local regulations. Neutralize residues.
- ☐ Keep the mounting surfaces, scaffolding, ladders, lifting platforms and tools clean in order to prevent slipping or stumbling.
- ☐ If pressurized or energized components are damaged, shut down the pump immediately. Replace the components or pump.

3 Identification

3.1 Type code

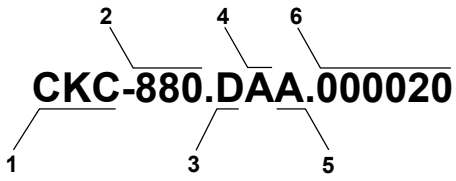

Fig. 1: Type code

Item	Classification	Description	
1	Type	CKC	☐ Pump with free shaft end ☐ Pump unit in flanged version ☐ Pump unit with or without pump bracket foot
2	Size		Corresponds to the delivery rate in [l/min] at 1450 min^{-1}
3	Pressure stage overflow valve	A	Pressure stage 0.0 – 9.9 bar
		B	Pressure stage 10.0 – 19.9 bar
		C	Pressure stage 20.0 – 29.9 bar
		D	Pressure stage 30.0 – 39.9 bar
		E	Pressure stage 40.0 – 55.0 bar
		Z	Without valve
		X	Special design
4	Suction-side accessories	A	Suction housing
		B	Suction strainer
		C	Connection for suction pipe
		Z	Without accessories
		X	Special design
5	Housing material	A	Silafont
		B	Spheroidal cast iron
		X	Special design
6	Version index		For internal administration

Tab. 2: Type code

3.2 Rating plate

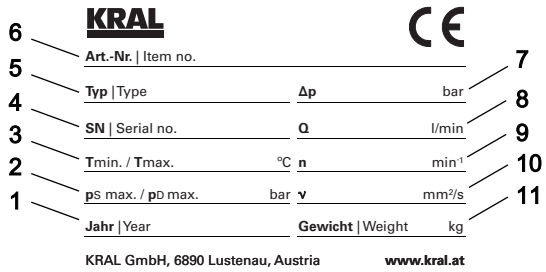

Fig. 2: Rating plate

1 Construction year
2 Max. operating overpressure suction-side/Max. operating overpressure pressure-side
3 Temperature range
4 Serial number
5 Type
6 Article number
7 Differential pressure
8 Nominal delivery rate
9 Rated speed
10 Nominal viscosity
11 Weight

4 Technical data

4.1 Operating limits

Parameter	Unit	Size 5 – 10	15 – 26	32 – 42	55 – 85	105 – 118	160 – 210	235 – 275	370 – 450	550 – 880
Max. operating overpressure	[bar]	100	70							40
Max. temperature of the pumped liquid										
☐ Standard radial shaft seal	[°C]	90								
☐ High-temperature radial shaft seal	[°C]	150								
Min. temperature for pump materials	[°C]	-10								
Min. – max. ambient temperature	[°C]	-10 ... 50								
Viscosity min. – max.	[mm^2/s]	4 – 5000					4 – 3000		4 – 2000	
Speed max.	Depending on viscosity, suction head/NPSH value and size. In case of any doubt, please contact the manufacturer.									
Max. inlet pressure										
☐ Radial shaft seal	[bar]	1.5								

Tab. 3: Operating limits

4.2 Limit values for tank installation

In the case of vertical installation with drawing in of the pumped liquid from a tank the following limit values of the liquid level have to be observed.

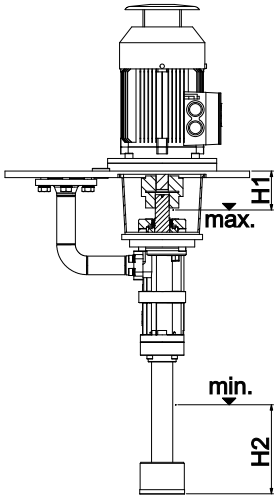

Fig. 3: Minimum/maximum liquid level

Liquid level in tank				Liquid level in tank			
Size		Limit value [mm]		Size		Limit value [mm]	
Pump	Motor	H1	H2	Pump	Motor	H1	H2
5 – 10	71	65	148	15 – 26	80	77	148
	80	75	148		90S/90L	78	148
	90S/90L	85	148		100L/112M	99	148
	100L/112M	115	148		132S/132M	139	148
	132S/132M	133	148		160M/160L	142	148
32 – 42	80	75	168	55 – 85	100L/112M	105	202
	90S/90L	75	168		132S/132M	132	202
	100L/112M	98	168		160M/160L	156	202
	132S/132M	137	168		180M/180L	183	202
	160M/160L	142	168		200L	183	202
105 – 118	100L/112M	106	244	160 – 210	100L/112M	101	290
	132S/132M	135	244		132S/132M	130	290
	160M/160L	157	244		160M/160L	173	290
	180M/180L	185	244		180M/180L	180	290
	200L	185	244		200L	180	290
	225/2	168	244		225/2	186	290
	225/4	219	244		225/4	214	290
235 – 275	100L/112M	101	290	370 – 450	100L/112M	101	342
	132S/132M	123	290		132S/132M	124	342
	160M/160L	173	290		160M/160L	173	342
	180M/180L	178	290		180M/180L	178	342
	200L	178	290		200L	178	342
	225/2	181	290		225/2	189	342
	225/4	212	290		225/4	195	342
					250/2	221	342
					250/4	221	342

Liquid level in tank				Liquid level in tank			
Size		Limit value [mm]		Size		Limit value [mm]	
Pump	Motor	H1	H2	Pump	Motor	H1	H2
550 – 880	132S/132M	130	386				
	160M/160L	179	386				
	180M/180L	185	386				
	200L	190	386				
	225/2	177	386				
	225/4	218	386				
	250/2	221	386				
	250/4	221	386				

Tab. 4: Liquid level in tank

4.3 Required NPSH values

The required NPSH values of the pump depend on the size, the viscosity of the pumped liquid and the speed.

The NPSH values are available on the website of the manufacturer:

www.kral.at/en/screw-pumps

4.4 Sound pressure level

Guide values at 1 m distance, 2900 min^{-1}, 20 bar, 21 mm^2/s

	Size										
	5	7.5	10	15	20	26	32	42	55	74	85
	Max. sound pressure level ±3 [dB(A)]										
Pump	49	51	52	53	55	56	54	56	57	58	60

	Size										
	105	118	160	210	235	275	370	450	550	660	880
	Max. sound pressure level ±3 [dB(A)]										
Pump	61	62	63	67	69	70	69	72	72	73	74

Tab. 5: Sound pressure level

4.5 Weights

The weight is specified on the rating plate.

5 Function description

5.1 Pump structure

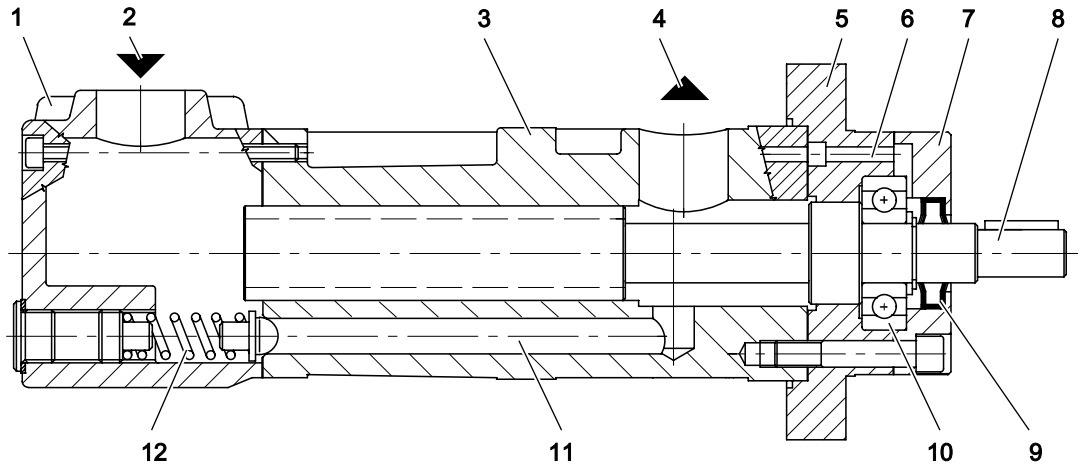

Fig. 4: Set up pump (with internal overflow valve)

1	Suction housing (accessories)	**7**	End cover
2	Suction-side connection	**8**	Main screw
3	Pump housing	**9**	Radial shaft seal
4	Pressure-side connection	**10**	Ball bearing
5	Flange cover	**11**	Return line to the overflow valve
6	Relief line	**12**	Overflow valve

5.2 Functional principle

Screw pumps are rotating pumps. Their displacement effect results from three rotating screws **7** and the enclosing pump housing **3**.

Radial support of the screw set is effected through the sliding contact in the pump housing that depends on lubrication by the pumped liquid. Screw pumps are therefore not suitable for dry running and can only be used up to specific pressure limits and viscosity limits. Due to the narrow tolerances pumping of suspended solids is not possible.

Axial support of the main screws is effected out by a lifetime-lubricated ball bearing **10**. One radial shaft seal **9** for sealing the main screw is inserted at the outlet from the housing. In order to reduce the pressure at the shaft seal a balancing cylinder is mounted at the main screw. The sealing chamber is connected with the suction chamber via a relief line **6**. An integrated overflow valve **12** protects against excessive pressure that could cause housing parts to burst.

The default direction of the rotation of the screw set is clockwise viewed from the motor and is marked on the flange cover **5** by an arrow. The flow direction is marked on the pump housing by an arrow.

5.3 Overflow valve

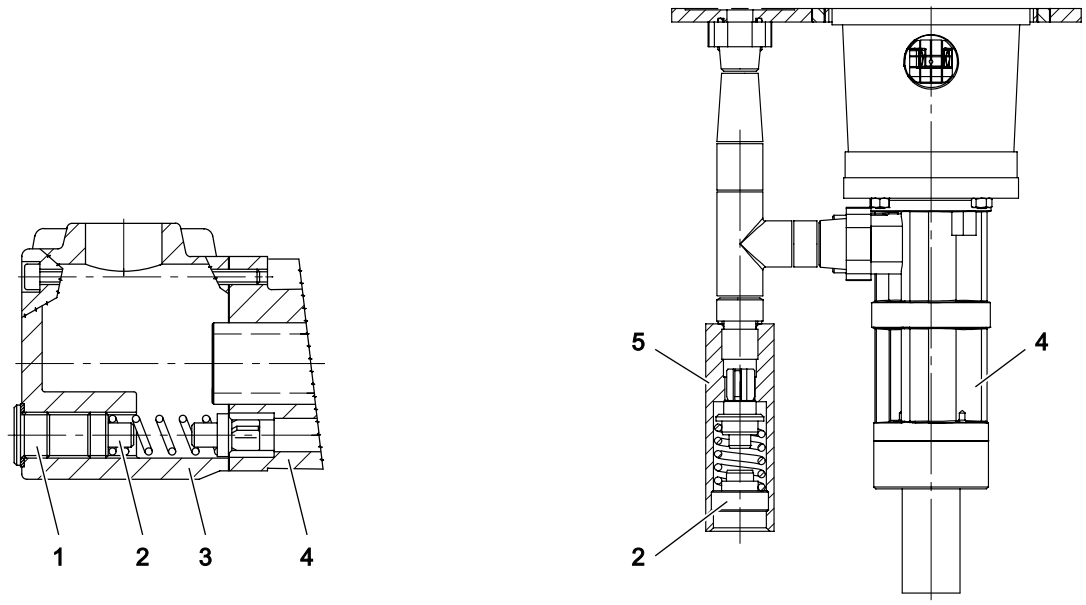

Fig. 5: Overflow valve (fig. left: integrated / fig. right: external)

1	Screw plug	**4**	Pump housing
2	Adjusting screw	**5**	Valve housing
3	Suction housing		

The overflow valve ensures that very high pressures that could result in housing parts bursting do not arise.

The overflow valve is purely there as a safety element for the pump and should not be used for control or regulation purposes such as maintaining pressure. If the valve is kept open for too long under adverse operating conditions (high differential pressures and/or low viscosities) it will only take a few minutes for the overflow valve and the valve seating to become damaged. As a result, the overflow valve will leak permanently and there will be a corresponding reduction in the delivery rate. In addition to this, circulation through the overflow valve for too long results in excess heating of the pump. This reduces viscosity and can ultimately lead to pump failure.

It therefore has to be ensured through a safety valve at the system that the maximum operating pressure always lies under the opening pressure of the overflow valve.

Note The opening pressure of the overflow valve is set to 110% of the differential pressure in the factory.

The overflow valve is accessible through a screw plug **1** and can be adjusted from the outside ↳ During operation, Page 23.

Note
- ☐ A function test of the overflow valve at least every 5 years is essential for the safe operation ↳ During operation, Page 23.
- ☐ Scope and if necessary shorter test intervals must be specified by the operator-owner in accordance with the requirements and national provisions (for example Austrian Ordinance of Safety and Health (BetrSichV)).
- ☐ The first function test must take place directly after the commissioning.
- ☐ After longer downtimes (> 4 weeks) the function of the overflow valve must be tested again.

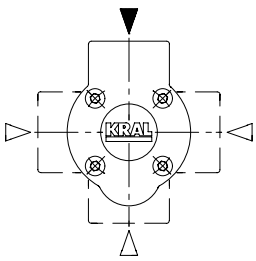

Note At pumps without integrated overflow valve the suction housing can be mounted with a respective rotation of 90°.

6 Transportation, storage

6.1 Dangers during transportation

The following safety instructions must be observed:

- ☐ Have all work only carried out by authorized transport personnel.
- ☐ Use intact and correctly dimensioned hoisting equipment.
- ☐ Ensure that the means of transport is in a flawless state.
- ☐ Ensure that the centre of gravity of the load is taken into consideration.
- ☐ Do not stand under raised loads.

6.2 Dangers during storage

The following safety instructions must be observed:

- ☐ Observe the storage conditions.

6.3 Unpacking and checking the state of delivery

Personnel qualification:	☐ Trained personnel

1. Upon delivery check the pump/pump unit for damage during transportation.
2. Report damage during transportation immediately to the manufacturer.
3. Dispose of packaging material in accordance with the locally applicable regulations.

6.4 Transporting the pump/pump unit

Personnel qualification:	☐ Transport personnel
Personal protective equipment:	☐ Work clothing ☐ Protective helmet ☐ Protective gloves ☐ Safety boots
Aids:	☐ Mobile crane, forklift, hoisting equipment

⚠ WARNING

Risk of injury and damage to equipment through falling and toppling parts.

- ► Use intact and correctly dimensioned hoisting equipment in accordance with the total weight to be transported.
- ► Select the lift points for the hoisting equipment in accordance with the centre of gravity and the weight distribution.
- ► Use at least two load ropes.
- ► In the case of vertical transportation secure the motor against tippling.
- ► Do not stand under raised loads.

ATTENTION

Damage to equipment through improper transportation.

- ► Protect the pump against damage, heat, sunlight, dust and moisture.

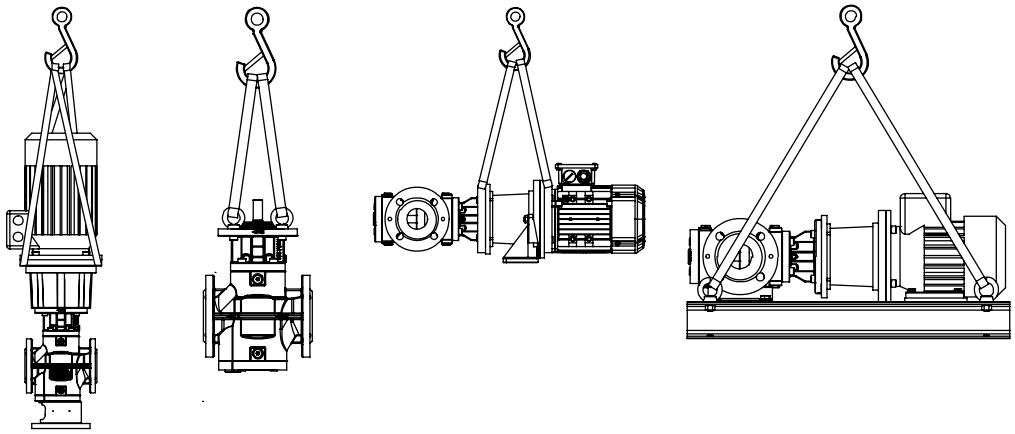

Fig. 6: Fastening of hoisting equipment - principle diagrams

1. Attach the hoisting equipment to the pump/pump unit and tighten. Ensure that the centre of gravity lies exactly under the crane hook.
2. Lift the pump/pump unit carefully and put it down shock-free.
3. Before loosening the transport belts ensure that the pump/pump unit is secured against tilting.

6.5 Storing the pump

During the test run, the internal components of the pump are wetted with test oil, which has a preservative effect. Pressure connection and suction connection are closed with protective caps. Unless otherwise specified, the outer surfaces of the pump are preserved with a single-coat PU-based two-component paint.

The preservative applied at the factory will protect the pump for about six weeks, if it is stored in a dry and clean location.

The manufacturer offers a long-term preservation for storage times of up to 60 months. The pump is additionally packed in hermetically sealing anti-corrosion paper.

Personnel qualification:	☐ Transport personnel
Aids:	☐ Mobile crane, forklift, hoisting equipment

ATTENTION

Damage to equipment and corrosion if stored improperly and during longer standstills.

- ► Protect the pump against damage, heat, sunlight, dust and moisture.
- ► Protect against corrosion during longer standstill.
- ► Observe measures for storing and preservation.

1. Store cool and dry and protect against sunlight.
2. Ensure that the anti-corrosion paper is not damaged.
3. Observe the intervals for preservation ↳ Preservation, Page 14.

7 Preservation

7.1 Preservation table

Preservation has to be carried out additionally under the following conditions:

Type of delivery	Condition
Standard delivery	☐ Storage time exceeding six weeks ☐ Unfavourable storage conditions such as high humidity, salty air, etc.
Delivery with long-term preservation	☐ Opened or damaged packaging

Tab. 6: Conditions for additional preservation

7.2 Preserving the inner surfaces

Personnel qualification:	☐ Trained personnel
Personal protective equipment:	☐ Work clothing ☐ Protective gloves ☐ Safety boots
Aids:	☐ Preservative (acid-free and resin-free oil)

1. Open the packaging carefully. If the pump is protected additionally by anti-corrosion paper, ensure that it is not damaged.
2. Close the suction connection of the pump with a blind flange.
3. Pour the preservative into the pressure connection until it reaches approx. 2 cm under the rim, while slowly turning the main screw against the direction of rotation.
4. Close the pressure connection of the pump with a new blind flange.
5. Close the packaging carefully.
6. After about six months storage check the filling level of the preservative and if necessary top up.

7.3 Preserving the outer surfaces

Personnel qualification:	☐ Trained personnel
Personal protective equipment:	☐ Work clothing ☐ Face protection ☐ Protective gloves ☐ Safety boots
Aids:	☐ Calcium complex grease (for example TEVIER® GREASE WAWE 100 with adhesive additive) ☐ Castrol Rustilo DWX 33 or other preservative offering comparable protection

1. Brush calcium complex grease corrosion protection (for example TEVIER® FETT WAWE 100 with adhesive additive) to the mounting surfaces.
2. Brush or spray preservative (for example Castrol Rustilo DWX 33) onto the process connections and remaining plain and unpainted parts.
3. At intervals of about six months check the preservation and if necessary repeat.

7.4 Removing the preservation

Personnel qualification:	☐ Trained personnel
Personal protective equipment:	☐ Work clothing ☐ Face protection ☐ Protective gloves ☐ Safety boots
Aids:	☐ Solvent ☐ Collection tank ☐ Steam-jet cleaning device with wax-dissolving additives

⚠ CAUTION

Risk of injury through discharging preservative.

- ► Wear personal protective equipment during all the work.
- ► Collect any discharging preservative safely and dispose of it in an environmentally compatible manner in accordance with the applicable local regulations.

1. ▶ Clean the outside of the pump with solvents, if necessary using a steam-jet cleaning device.
2. ▶ Remove the pressure-side blind flange carefully in order to reduce any pressure that may exist in the pump.
3. ▶ Drain the pump, collecting the preservative in a suitable vessel.
4. ▶ Remove the blind flange on the suction side.
5. ▶ To remove the residual preservative, flush the pump with the pumped liquid.

8 Installation, removal

8.1 Dangers during installation

The following safety instructions must be observed strictly:
☐ Have all work carried out only by authorized qualified personnel.
☐ Before installation ensure that the operating limits, NPSH values and ambient conditions are observed.
☐ Observe the tightening torques ↳ Appendix, Page 39.
☐ Ensure that all the components can be accessed and that maintenance work can be carried out easily.

8.2 Dangers during removing

The following safety instructions must be observed strictly:
☐ Have all work carried out only by authorized qualified personnel.
☐ Before beginning work, let the pump unit cool down to the ambient temperature.
☐ Collect any discharging pumped liquid safely and dispose of it in an environmentally compatible manner in accordance with the applicable local regulations.
☐ Ensure that the collection tank for discharging pumped liquid is sufficiently large.

8.3 Installing the pump

The pumps can be operated in horizontal and vertical installation position.

Note Soiling in the pipe system impair the service life of the pump. If the pipe system is flushed using the pump during the initial commissioning, an additional commissioning filter has to be installed temporarily before the pump at the system (mesh width: 0.02 mm).

Personnel qualification:	☐ Transport personnel ☐ Fitter
Personal protective equipment:	☐ Work clothing ☐ Protective helmet ☐ Protective gloves ☐ Safety boots
Aids:	☐ Mobile crane, forklift, hoisting equipment

⚠ WARNING

Risk of injury and damage to equipment through falling and toppling parts.

- ► Only fasten the pump on a stable load-bearing underground or stable load-bearing load support.
- ► Ensure that fastening elements and pipings are fastened sufficiently.

ATTENTION

Damage to motor through discharging pumped liquid.

- ► Do not install the pump above the motor.

ATTENTION

Damage to device through impurity in the pipe system.

- ► During welding work attach protective covers in front of the connecting flanges.
- ► Ensure when welding that welding beads and abrasive dust cannot get into the pipe system and the pump.
- ► Ensure that a commissioning filter is installed when the pipe system is flushed and cleaned using the pump.

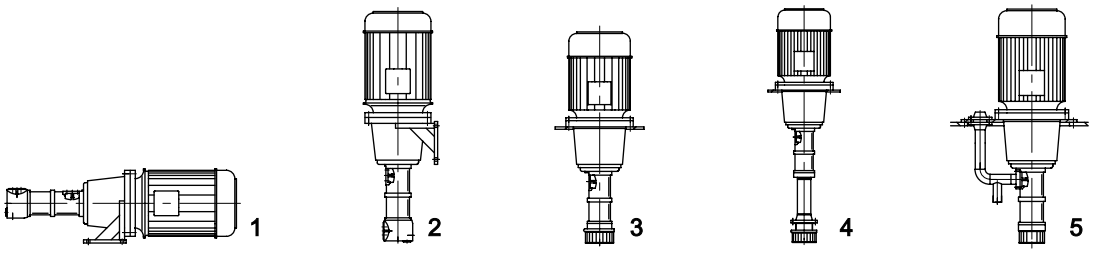

Fig. 7: Installation variants

1 Setup horizontal
2 Wall mounting vertical
3 Setup vertical with suction strainer
4 Setup vertical with suction pipe and suction strainer
5 Setup vertical with suction strainer, mounting panel and external overflow valve

Note At a vertical setup (suction operation) the manufacturer recommends the installation of a foot valve. This way the suction process is facilitated, coarse soiling is kept away and emptying of the suction line is prevented.

Requirement:

- ✓ Pump connections protected against soiling, for example by using the protective cover mounted in the factory
- ✓ If required, hoisting equipment prepared

1. ► Bring the pump in the installation position while observing the position of the motor and the flow direction, see arrow on the pump housing.
2. ► Fasten the pump with fastening elements securely on the underground.
3. ► At a vertical setup observe the minimum and maximum liquid level in the tank ↬ Technical data, Page 7.
4. ► At a vertical setup (suction operation) install a foot valve with suction strainer.

8.4 Removing the pump

Personnel qualification:	☐ Transport personnel ☐ Fitter ☐ Electrician
Personal protective equipment:	☐ Work clothing ☐ Protective helmet ☐ Face protection ☐ Protective gloves ☐ Safety boots
Aids:	☐ Mobile crane, forklift, hoisting equipment ☐ Collection tank

⚠ DANGER

Risk of death resulting from electric shock.

- ► Ensure that the electrical power supply is de-energized and is secured against being switched back on.
- ► Observe the operating instructions of the electrical components.

⚠ DANGER

Risk of death through emitted pumped liquid.

Pumped liquids can be hot, poisonous, combustible and caustic and can spray out under high pressure.

- ► Wear personal protective clothing during all the work. Ensure face protection.
- ► Before beginning work, let the pump unit cool down to the ambient temperature.
- ► Ensure that the pump is depressurized.
- ► Collect any discharging pumped liquid safely and dispose of it in an environmentally compatible manner in accordance with the applicable local regulations.

Requirement:

- ✓ Pump unit cooled down to the ambient temperature
- ✓ Pump unit disconnected from the electrical power supply, deenergized and secured against being switched back on

1. ► Close the pressure-side and suction-side shut-off devices.
2. ► Empty the pump at the lowest point. Collect the discharging pumped liquid in a collection tank.
3. ► Dismantle the pressure-side and suction-side connecting flanges.
4. ► Disconnect the pump unit from the pipe system and empty it. Collect any discharging pumped liquid.
5. ► Screw out the fastening elements used to fasten the pump.
6. ► Dismantle the pump unit on site or transport it to a suitable location ↳ Transportation, storage, Page 12.

9 Connection

9.1 Dangers during connection work

The following safety instructions must be observed strictly:

- ☐ Have all work on the pump and pipe system only carried out by authorized qualified personnel.
- ☐ Ensure that impurities cannot get into the pump and pipe system.
- ☐ Ensure that mechanical connections are mounted stress-free.
- ☐ Observe the tightening torques ↳ Appendix, Page 39.
- ☐ Have all the work on the electrical equipment only carried out by electricians.
- ☐ Before beginning work on the pump ensure that the electrical power supply is deenergized and is secured against being switched back on.
- ☐ If the insulation of the electrical cables or wires is damaged, disconnect the power supply immediately.

9.2 Connecting the pump to the pipe system

Personnel qualification:	☐ Transport personnel ☐ Fitter
Personal protective equipment:	☐ Work clothing ☐ Protective gloves ☐ Protective helmet ☐ Safety boots
Aids:	☐ Mobile crane, forklift, hoisting equipment

ATTENTION

Damage to device through impurity in the pipe system.

- ► During welding work attach protective covers in front of the connecting flanges.
- ► Ensure when welding that welding beads and abrasive dust cannot get into the pipe system and the pump.
- ► Ensure that a commissioning filter is installed when the pipe system is flushed and cleaned using the pump.

ATTENTION

Damage to device through mechanical stress.

- ► Ensure that the pump is mounted free of mechanical stresses in the pipe system.
- ► Observe the tightening torques.

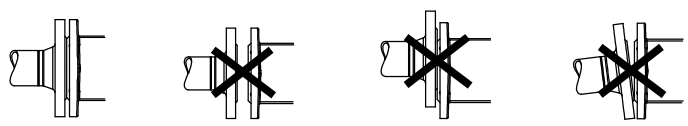

Fig. 8: Connection to pipe system

1. Turn the pump shaft or the fan impeller of the motor. This tests that the pump runs smoothly. If the pump shaft cannot be turned by hand, remedy the fault before installing the pump ↳ Troubleshooting, Page 33.
2. Before carrying out welding work mount a protective cover on the suction connection and pressure connection.
3. Place the piping in position and support the weight of the piping.
4. Check the linear, height and angular offset and correct if necessary.
   ⇨ If the screws tighten easily, this is a sure sign that the installation is stress-free.
5. Tighten the connecting screws crosswise with torque, Table of tightening torques ↳ Appendix, Page 39.

9.3 Insulating the pump

Personnel qualification:	☐ Fitter
Personal protective equipment:	☐ Work clothing ☐ Protective gloves ☐ Safety boots
Aids:	☐ Insulation material

⚠ WARNING

Hot surface.

Touching of uninsulated hot surfaces results in burns.

► Insulate components and pipings in which hot liquids (> 60 °C) flow before commissioning.

→ Before commissioning, carefully insulate all potentially hot surfaces of the pump and the connected piping or provide suitable protection against accidental contact.

9.4 Assembling the pump and motor

Personnel qualification:	☐ Fitter
Personal protective equipment:	☐ Work clothing ☐ Protective gloves ☐ Safety boots

ATTENTION

Damage to coupling and bearing through incorrect alignment of the coupling.

► To guarantee a long service life of the coupling, align shaft ends exactly.

► After assembly check permissible displacement figures of the coupling according to table below.

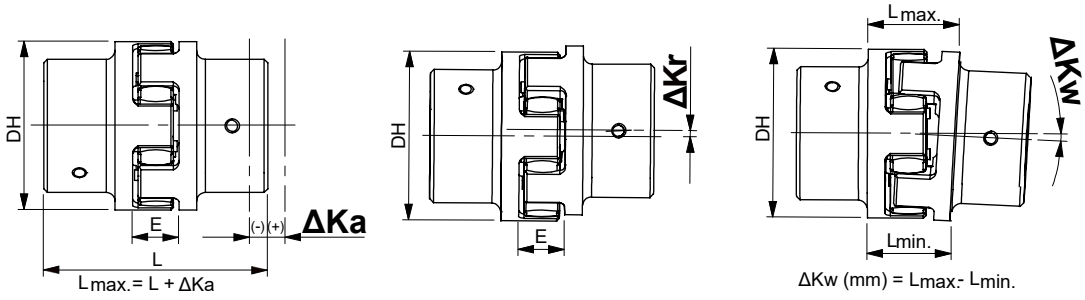

Fig. 9: Coupling alignment measuring points

Outer diameter	Coupling distance	Max. axial displacement	Max. radial displacement	Max. angular displacement	
DH	E	ΔKa	ΔKr	ΔKw	
[mm]	[mm]	[mm]	[mm]	[°]	[mm]
40	16	-0.5/ +1.2	0.20	1.2	0.8
55	18	-0.5/ +1.4	0.22	0.9	0.9
65	20	-0.7/ +1.5	0.25	0.9	1.1
80	24	-0.7/ +1.8	0.28	1.0	1.4
95	26	-1.0/ +2.0	0.32	1.0	1.7
120	30	-1.0/ +2.2	0.38	1.1	2.3
135	35	-1.0/ +2.6	0.42	1.2	2.7

Tab. 7: Limit values for aligning the shaft coupling

1. Check the radial displacement **ΔKr** of the coupling using a hairline gauge and feeler gauge. Check several points along the periphery of the coupling.
2. Check the angular displacement **ΔKw** of the coupling using a hairline gauge.
3. Check the axial displacement **ΔKa** of the coupling using a slide gauge or feeler gauge.
4. If the limit values of the above table are exceeded, loosen the fastening of the pump or motor and move pump or motor in order to reduce the respective offset.

9.5 Connecting the pump unit to the power supply

Personnel qualification:	☐ Electrician
Aids:	☐ Operating instructions of the motor ☐ Motor circuit diagram

⚠ DANGER

Risk of death resulting from electric shock.

- ► Ensure that the electrical power supply is de-energized and is secured against being switched back on.
- ► Before commissioning ensure correct grounding and equipotential bonding.
- ► Observe the operating instructions of the electrical components.

1. Ensure that the operating data on the rating plate of the motor agree with the operating data of the pump and with the local power supply.
2. Carefully earth the pump bracket foot, base frame or pedestal via the screwing.
3. Connect the motor in accordance with the operating instructions and circuit diagram in the motor terminal block.
4. When connecting the pump unit to the complete system continue equipotential bonding.

10 Operation

10.1 Dangers during operation

The following safety instructions must be observed strictly:

- ☐ Have all work carried out only by authorized qualified personnel.
- ☐ Before commissioning ensure that a safety valve has been installed in the pipe system on the pressure side before the first shut-off device.
- ☐ Before commissioning, make sure that the suction line and pump are filled.
- ☐ Pumped liquids can be hot, poisonous, combustible and caustic. Use corresponding protective equipment.
- ☐ Ensure that the pump station is only operated within the operating limits.
- ☐ Wear hearing protection if you work for a longer time directly at the pump.
- ☐ Ensure that the maximum permissible system pressure is not exceeded.
- ☐ Ensure that during cooling down or heating up the pump is only subjected to slow temperature changes.
- ☐ Ensure that existing safety equipment is not bypassed or activated during operation.
- ☐ Before decommissioning ensure that the electrical power supply is deenergized and is secured against being switched back on.

10.2 Commissioning

10.2.1 Cleaning the pipe system

Note Soiling in the pipe system impair the service life of the pump. If the pipe system is flushed using the pump during the initial commissioning, an additional commissioning filter has to be installed temporarily before the pump at the system.

Personnel qualification:	☐ Fitter
Personal protective equipment:	☐ Work clothing ☐ Protective gloves ☐ Safety boots

ATTENTION

Damage to equipment through additional pressure loss in the commissioning filter/commissioning strainer.

- ► Calculate the flow resistance and determine the remaining pump intake.
- ► Monitor the suction-side pressure.
- ► Check the commissioning filter/commissioning strainer regularly.

Requirement:

✓ If required, commissioning filter installed (mesh width 0.02 mm)

1. ► Clean the complete pipe system before commissioning in order to protect the pump.
2. ► Flush the pipe system at least 50 – 100 hours.

10.2.2 Filling the pump

Personnel qualification:	☐ Fitter
Personal protective equipment:	☐ Work clothing ☐ Face protection ☐ Protective gloves ☐ Safety boots

⚠ DANGER

Risk of death through discharging pumped liquid.

Pumped liquids can be hot, poisonous, combustible and caustic and can spray out under high pressure.

- ► Wear personal protective equipment during all the work. Ensure face protection.
- ► Collect any discharging pumped liquid safely and dispose of it in an environmentally compatible manner in accordance with the applicable local regulations.

ATTENTION

Dry running can damage pump equipment.

- ► Ensure that the pump is filled properly.

1. ► Before commissioning fill the piping and pump via the suction connection with pumped liquid, for example via a tank that is positioned higher.
2. ► During the filling process turn the pump shaft or the fan impeller of the motor by hand in the direction of rotation of the motor in order to speed up the filling process.

10.2.3 Checking the direction of rotation

The direction of rotation is indicated by an arrow on the pump flange/pump housing. The direction of rotation of the motor specifies the direction of rotation of the pump. The fan impeller of the motor must rotate in the same direction in which the arrow for the direction of rotation on the pump flange points.

Note Standard direction of rotation: clockwise (viewed from the motor)

Personnel qualification:	☐ Fitter

ATTENTION

Dry running can damage pump equipment.

- ► Ensure that the pump is filled properly.
- ► Switch the pump on for a maximum of one second and then off again immediately.

1. ▶ Switch on the power supply and then turn it off again immediately.

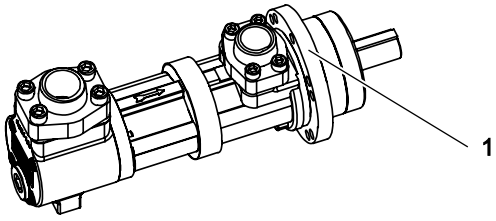

2. ▶ Compare the direction of rotation of the fan impeller with the arrow for the direction of rotation **1**.
3. ▶ If the directions do not match, swap the two electrical connection phases. Repeat Steps 1 and 2.

10.2.4 Commissioning the pump

Personnel qualification:	☐ Fitter ☐ Electrician
Personal protective equipment:	☐ Work clothing ☐ Face protection ☐ Protective gloves ☐ Safety boots
Aids:	☐ Collection tank

⚠ DANGER

Risk of death resulting from bursting components and discharging pumped liquid.

As a result of impermissibly high pressure, components can burst with high energy, for example through the pressure-side pipe system being shut off.

- ► Wear personal protective equipment during all the work.
- ► System protection: Before carrying out commissioning ensure that a safety valve is installed in the pressure-side pipe system at the system end.
- ► Pump protection: Ensure before commissioning that an integrated overflow valve or system-side overflow valve/safety valve is installed.

⚠ WARNING

Risk of injury through emitted pumped liquid.

Pumped liquids can be hot, poisonous, combustible and caustic.

- ► Wear personal protective clothing during all the work. Ensure face protection.
- ► Collect any discharging pumped liquid safely and dispose of it in an environmentally compatible manner in accordance with the applicable local regulations.

⚠ WARNING

Hot surface.

Touching of uninsulated hot surfaces results in burns.

- ► Insulate components and pipings in which hot liquids (> 60 °C) flow before commissioning.

⚠ WARNING

Danger of injury through rotating parts.

► Ensure that the coupling protection is mounted.

ATTENTION

Dry running can damage pump equipment.

► Ensure that the pump and the connected pipe system are filled properly.

► If the pump does not deliver after 10 – 15 seconds, abort commissioning.

Requirement:

✓ Pump unit set up correctly
✓ Coupling aligned correctly ↳ Connection, Page 18
✓ Connections connected sealingly
✓ Motor connected correctly
✓ Pipe system is free of impurities
✓ System protection: Safety valve in accordance with EN ISO 4126-1 installed in the pressure-side pipe system before the first shut-off device
✓ Pump protection: Integrated overflow valve or system-side overflow valve/safety valve installed.
✓ Pump filled with pumped liquid
✓ Shut-off devices in the suction line and pressure line opened

1. Switch on the pump unit.
   ⇨ The pump delivers when the pressure on the pressure side of the pump rises or a flow indicator at the system side triggers.
2. If the pump does not deliver after 10 – 15 seconds of operation, abort commissioning. Eliminate the cause of the fault and only then continue with commissioning. Take the information from the troubleshooting table into account ↳ Troubleshooting, Page 33.
3. Run the pump for a few minutes to allow the pipe system to vent fully.
   ⇨ The pipe system is fully vented when the pump operating noise is smooth and a pressure gauge on the pressure side shows no more fluctuations.
4. Checking overflow valve functions ↳ During operation, Page 23.

10.3 During operation

10.3.1 Checking the operating pressure

Personnel qualification:	☐ Trained personnel

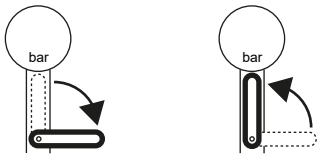

Fig. 10: Pressure gauge shut-off valves closed/open - principle diagram

ATTENTION

Leak in the pressure gauge through permanently opened pressure gauge shut-off valve.

► Close the pressure gauge shut-off valve immediately after completing reading.

1. Open the pressure gauge shut-off valve.
2. Read the operating pressure and close the pressure gauge shut-off valve.

10.3.2 Monitoring the filter and/or strainer

Personnel qualification:	☐ Trained personnel

1. After commissioning monitor the degree of soiling of the filter and/or strainer by means of a suction-side pressure gauge or a differential pressure indication.
2. Also check the filters/strainers in the event of a pressure drop on the suction side. Observe the dimensioning data of the manufacturer of the filters and/or strainers.
3. Check the suction-side pressure every two weeks during operation.
4. Regularly check the magnetic separator in the filter/strainer during operation and clean it if necessary.

10.3.3 Adjusting the overflow valve

Personnel qualification:	☐ Fitter
Aids:	☐ Allen key

Note The opening pressure of the overflow valve is set to 110% of the differential pressure in the factory.

⚠ WARNING

Risk of injury through emitted pumped liquid.

Pumped liquids can be hot, poisonous, combustible and caustic.

- ► Wear personal protective clothing during all the work. Ensure face protection.
- ► Collect any discharging pumped liquid safely and dispose of it in an environmentally compatible manner in accordance with the applicable local regulations.

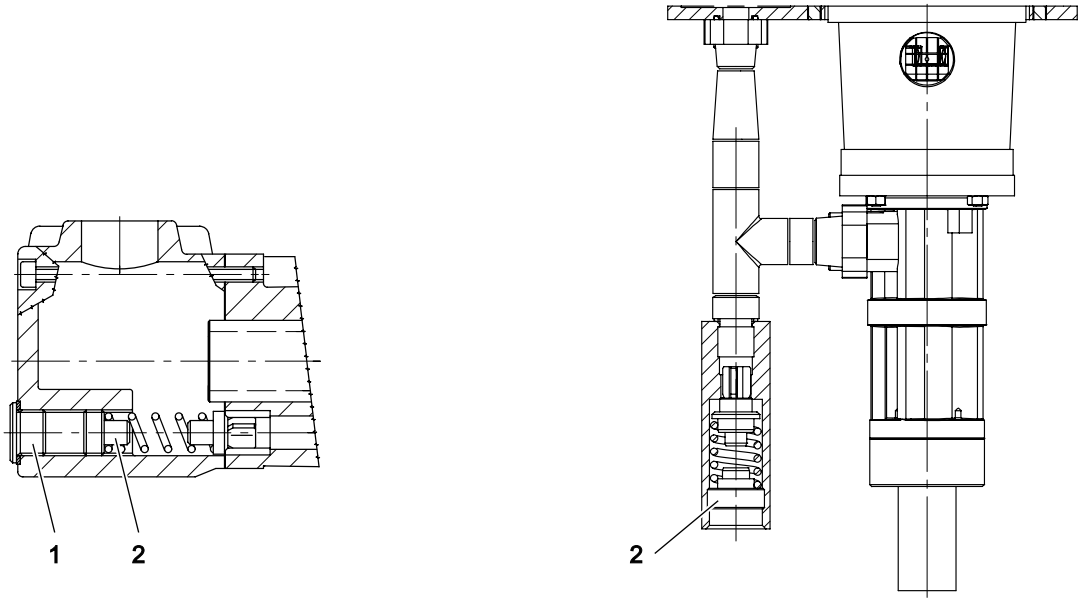

Fig. 11: Overflow valve (fig. left: integrated / fig. right: external)

1 Screw plug **2** Adjusting screw

Requirement:

✓ Pressure-side pressure gauge installed

1. At an integrated overflow valve remove the screw plug **1**.
2. Switch on the pump and increase the supply pressure step-by-step to check the opening pressure of the overflow valve. Keep an eye on the pressure gauge and make sure that the operating limits are observed.
   ⇨ The opening pressure is reached, when the displayed pressure falls.
3. Turn the adjusting screw **2** to set the opening pressure:
   Turning clockwise: Increase the opening pressure
   Turning counter-clockwise: Reduce the opening pressure
4. Repeat Steps 2 and 3 until the desired opening pressure is reached.

5. ▶ At an integrated overflow valve retighten the screw plug **1**.

10.3.4 Switching off the pump unit

Personnel qualification:	☐ Trained personnel

ATTENTION

Seal damage through pressurizing during standstill.

► Ensure that the maximum permissible system pressure is not exceeded.

1. ▶ Switch off the motor.
2. ▶ Close the pressure-side shut-off device.

10.4 Decommissioning

10.4.1 Decommissioning the pump

Decommissioning is an operation interruption that requires different measures depending on the scope and duration of the interruption as well as the properties of the pumped liquid.

Personnel qualification:	☐ Fitter ☐ Electrician
Personal protective equipment:	☐ Work clothing ☐ Protective gloves ☐ Safety boots
Aids:	☐ Collection tank

⚠ WARNING

Risk of injury through emitted pumped liquid.

Pumped liquids can be hot, poisonous, combustible and caustic.

► Wear personal protective clothing during all the work. Ensure face protection.

► Collect any discharging pumped liquid safely and dispose of it in an environmentally compatible manner in accordance with the applicable local regulations.

ATTENTION

Damage to equipment through excessively fast temperature change.

► Subject the pump only to slow temperature changes.

► Under no circumstances heat the pump with an open flame.

▶ Carry out the following measures during operation interruptions:

Scope of the operation interruption	Measure
☐ Shutting down the pump for a longer period	▶ Depending on the pumped liquid
☐ Draining the pump	▶ Close the pressure-side and suction-side shut-off devices.
☐ Dismantling the pump	▶ Disconnect the motors from the power supply and secure against being switched back on.
☐ Storing the pump	▶ Observe measures for storing and preservation ↳ Transportation, storage, Page 12.

Tab. 8: Measures during operation interruptions

Behaviour of the pumped liquid	Duration of the operation interruption	
	Short	Long
☐ Solids sediment	→ Rinse the pump.	→ Rinse the pump.
☐ Congealed/frozen ☐ No corrosive burden	→ Heat or drain the pump.	→ Drain the pump.
☐ Congealed/frozen ☐ Corrosive burden	→ Heat or drain the pump.	1. → Drain the pump. 2. → Preserve the pump.
☐ Remains liquid ☐ No corrosive burden	–	–
☐ Remains liquid ☐ Corrosive burden	–	1. → Drain the pump. 2. → Preserve the pump.

Tab. 9: Measures depending on the behaviour of the pumped liquid

→ Drain the pump via the pressure line, suction line, vent screws and screw plugs.

10.5 Recommissioning

10.5.1 Recommissioning the pump

→ Depending on the extent and duration of the interruption of operation, carry out steps as for commissioning ↳ Commissioning, Page 20.

11 Maintenance

11.1 Dangers during maintenance

The following safety instructions must be observed strictly:

- ☐ Have all work carried out only by authorized qualified personnel.
- ☐ Before beginning work, let the pump unit cool down slowly to the ambient temperature. Avoid rapid temperature changes.
- ☐ Pumped liquids can be hot, poisonous, combustible and caustic. Use corresponding protective equipment.
- ☐ Collect any discharging pumped liquid safely and dispose of it in an environmentally compatible manner in accordance with the applicable local regulations.
- ☐ Ensure that the collection tank for discharging pumped liquid is sufficiently large.
- ☐ Observe the operating instructions and data sheets of the components.

11.2 Required maintenance

The service life depends on the observance of the operating conditions of the pump and the requirements from the operating instructions of the components.

Component	Required maintenance	Cycle
Filter/strainer (system side)	☐ Check of the suction-side pressure	2 weeks
Overflow valve	☐ Function test	≤ 5 years

Tab. 10: Required maintenance

11.3 Ball bearing (inner bearing)

The ball bearings used are lubricated by the pumped liquid. Maintenance is therefore not required. The manufacturer recommends renewing the ball bearings every 20,000 operating hours. When using the pump in lubrication oil applications a bearings replacement at the latest after 5 years (40000 h) is sufficient.

11.4 Maintaining the pump

Personnel qualification:	☐ Fitter
Personal protective equipment:	☐ Work clothing ☐ Protective gloves ☐ Safety boots ☐ Face protection

⚠ WARNING

Risk of injury through emitted pumped liquid.

Pumped liquids can be hot, poisonous, combustible and caustic.

- ► Wear personal protective clothing during all the work. Ensure face protection.
- ► Collect any discharging pumped liquid safely and dispose of it in an environmentally compatible manner in accordance with the applicable local regulations.

1. ► Check the pump visually and acoustically every four weeks.
2. ► If there are signs of wear, eliminate the cause ↳ Servicing, Page 27.

12 Servicing

12.1 Dangers during servicing

The following safety instructions must be observed strictly:

- ☐ Have all work carried out only by authorized qualified personnel.
- ☐ Before beginning work on the pump ensure that the electrical power supply is deenergized and is secured against being switched back on.
- ☐ Before beginning work, let the pump unit cool down slowly to the ambient temperature. Avoid rapid temperature changes.
- ☐ Pumped liquids can be hot, poisonous, combustible and caustic. Use corresponding protective equipment.
- ☐ Ensure that the pump is depressurized and that shut-off devices are not operated uncontrolled.
- ☐ Collect any discharging pumped liquid safely and dispose of it in an environmentally compatible manner in accordance with the applicable local regulations.
- ☐ Ensure that the collection tank for discharging pumped liquid is sufficiently large.
- ☐ Observe the tightening torques ↳ Appendix, Page 39.
- ☐ Observe the operating instructions and data sheets of the components.

12.2 Wear

12.2.1 Signs of wear

The following table lists signs of progressive wear of individual pump elements:

Finding	Cause	Elimination
Increased running noises	Incipient damage to bearing	► Replace the ball bearing.
Increased leaking	Incipient damage to seal	► Replace the shaft seal.
Deposits at the shaft seal (only applies for mechanical seal)	Low-volatile liquids	► Clean the mechanical seal.
Increased play in the coupling	Advanced wear of the coupling intermediate ring	► Replace the coupling intermediate ring.
Reduction in the delivery rate or pressure under constant operating conditions	Advanced wear of screws and housing	► Replace the pump.

Tab. 11: Signs of wear

12.3 Replacing the coupling

12.3.1 Removing the coupling

Personnel qualification:	☐ Fitter
Personal protective equipment:	☐ Work clothing ☐ Protective gloves ☐ Safety boots
Aids:	☐ Extractor

⚠ WARNING

Risk of injury and damage to equipment through falling and toppling parts.

- ► Use intact and correctly dimensioned hoisting equipment in accordance with the total weight to be transported.
- ► Select the lift points for the hoisting equipment in accordance with the centre of gravity and the weight distribution.
- ► Use at least two load ropes.
- ► In the case of vertical transportation secure the motor against tippling.
- ► Do not stand under raised loads.

Requirement:

✓ Pump unit disconnected from the electrical power supply, deenergized and secured against being switched back on

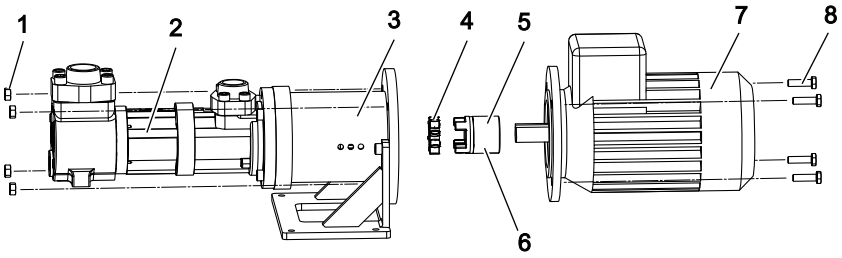

1. ▶ Secure the motor **7** with eye bolts/hoisting equipment in such a way that the motor can be pulled out horizontally.
2. ▶ Remove the socket screws **8** between the motor and pump bracket **3** and pull out the motor.
3. ▶ Loosen the fixing screw **6** at the motor-side coupling half **5**.
4. ▶ Remove the coupling intermediate ring **4** and pull off the coupling half using an extractor.

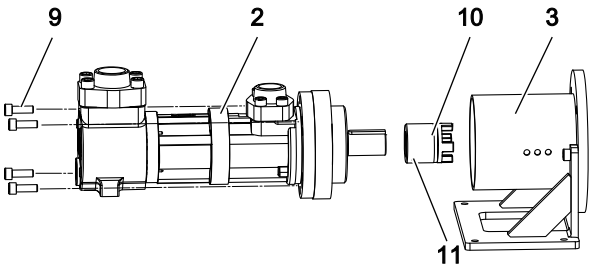

5. ▶ Secure the pump **2** with eye bolts/hoisting equipment in such a way that the pump bracket can be pulled exactly horizontally from the pump.
6. ▶ Remove the socket screws between the pump bracket foot and the mounting surface.
7. ▶ Pull out the socket screws **9** between the pump and pump bracket and remove the pump bracket.
8. ▶ Loosen the fixing screw **11** at the pump-side coupling half **10** and pull off the coupling half using an extractor.

12.3.2 Installing the coupling

Personnel qualification:	☐ Fitter
Personal protective equipment:	☐ Work clothing ☐ Protective gloves ☐ Safety boots
Aids:	☐ Measuring stick ☐ Silicone oil

Note The coupling halves can be mounted more easily if they are heated to 80 °C – 100 °C.

Requirement:

✓ Position of the pump in the pipe system secured with eye bolts/hoisting equipment

1. Oil the shaft of the pump with silicone oil.

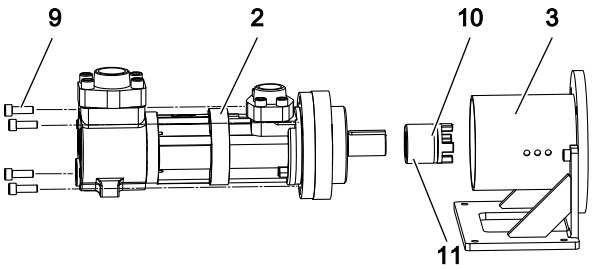

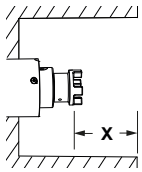

2. Ensure that the fixing screw **11** of the pump-side coupling half **10** is loosened.
3. Slide the pump-side coupling half onto the shaft until it stops and tighten the fixing screw.
4. Tighten the socket screws **9** between the pump and pump bracket **3** with torque.
5. Tighten the socket screws between the pump bracket foot and mounting surface with torque.
6. Measure and write down the distance **X** between the face of the coupling claws and the fitting surface of the pump bracket.

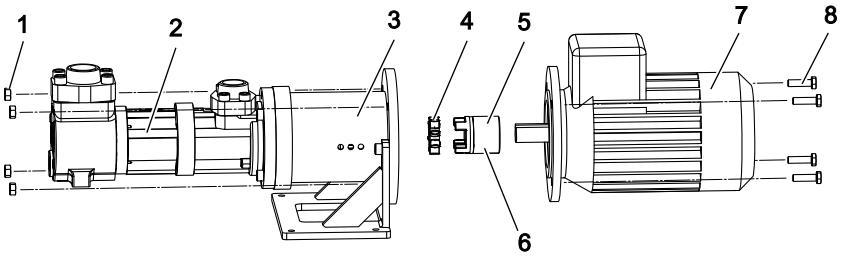

7. Ensure that the fixing screw **6** of the motor-side coupling half **5** is loosened.
8. Slide the motor-side coupling half onto the shaft end of the motor **7**.

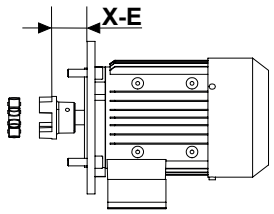

9. Check the distance between the face of the coupling teeth pump-side and the fitting surface of the motor flange. The distance has to be adjusted to the measured value **X** minus coupling distance **E**, see table of limit values for aligning the shaft coupling ↳ Connection, Page 18.
10. Tighten the fixing screw **6** on the motor-side coupling half and insert the coupling intermediate ring **4**.
11. Secure the motor with eye bolts/hoisting equipment so that the coupling halves interlock and the motor can be installed exactly horizontally at the pump bracket.
12. Tighten the socket screws **8** between the motor and pump bracket with torque.

12.4 Replacing the radial shaft seal

12.4.1 Removing the radial shaft seal

Personnel qualification:	☐ Fitter
Personal protective equipment:	☐ Work clothing ☐ Protective gloves ☐ Safety boots
Aids:	☐ Tool set, radial shaft seal ↳ Spare parts, Page 36

Requirement:
- ✓ Pump unit disconnected from the electrical power supply, deenergized and secured against being switched back on
- ✓ Coupling removed

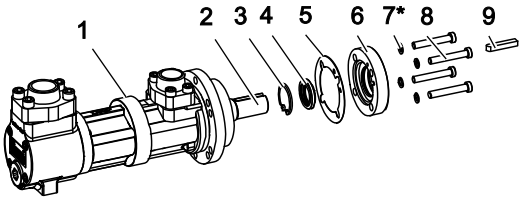

1. Remove the feather key **9** from the main screw **2**.
2. Remove the socket screws **8** and remove the end cover **6**.
3. Remove the circlip **3** and press the radial shaft seal ring **4** from the end cover **6**.
4. Remove the flat gasket **5** and carefully clean the fitting surfaces.

12.4.2 Installing the radial shaft seal

Personnel qualification:	☐ Fitter
Personal protective equipment:	☐ Work clothing ☐ Protective gloves ☐ Safety boots
Aids:	☐ Thread sealant (for example Loctite 572) ☐ Molybdenum disulphide paste (for example Fenkart T4) ☐ Tool set, radial shaft seal ↳ Spare parts, Page 36

Note The thread sealant serves during installation of the radial shaft seal as a lubricant, and after it has cured as an anti-rotation measure.

Note Use tool set for assembly.

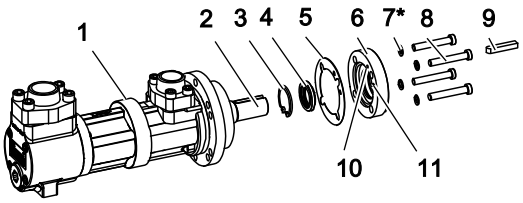

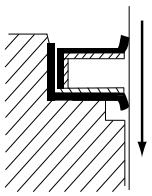

1. Clean the contact surface of the radial shaft seal ring **4** in the end cover **6** carefully.
2. Apply a thread sealant (for example Loctite 572) as a lubricant. Ensure that the thread sealant does not come into contact with the sealing lip.
3. Carefully press the radial shaft seal ring with mounting arbour into the end cover. Note the assembly direction. In the case of excessive resistance apply additional thread sealant.
4. Ensure that the mounting arbour contacts the support of the seal ring flat and that there are no sharp edges around the sealing lip.
5. Fill the radial shaft seal ring with molybdenum disulphide paste (MoS_2).
6. Mount the circlip **3**.
7. Place the flat gasket **5** on the end cover.
8. **From size 55:** Ensure that the adapter sleeve **10** is not damaged when mounting the end cover. Take the hole into account.
9. Mount the end cover. To do so use the main spindle mounting sleeve. Take the position of the vent hole **11** into account and tighten the cylinder screws **8** with torque.

10. Remove the main screw mounting sleeve.
11. Mount the feather key **9** on the main screw **2**.

12.5 Replacing the ball bearing

12.5.1 Removing the ball bearing

Personnel qualification:	☐ Fitter
Personal protective equipment:	☐ Work clothing ☐ Protective gloves ☐ Safety boots
Aids:	☐ Extractor

Requirement:
✓ Pump removed
✓ Shaft seal removed

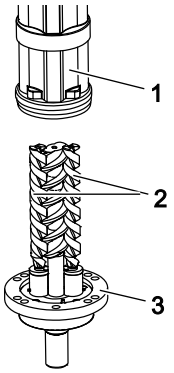

1. Clamp the pump at the main screw. Ensure that the shaft is not damaged in the process.
2. Lift the pump housing **1** off the flange cover **3**. Hold the idle screws **2** in the process.

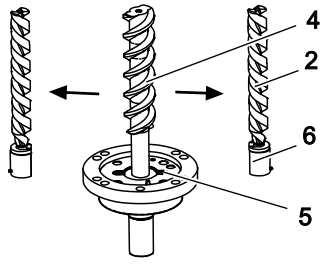

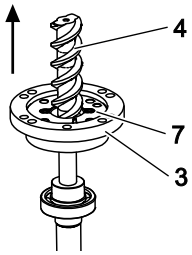

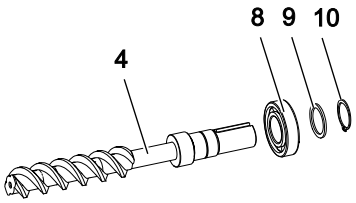

3. Remove the idle screws and keep for mounting.
4. Remove the edge sealing rings **5** from the flange cover and keep for mounting.
5. Lift the flange cover **3** from the main screw **4** and the remove flat gasket **7**.
6. Unclamp the main screw, rotate by 180° and remove the circlip **10** as well as the supporting ring **9**.
7. Use the extractor to pull the ball bearing **8** off the main screw.

12.5.2 Installing the ball bearing

Personnel qualification:	☐ Fitter
Personal protective equipment:	☐ Work clothing ☐ Protective gloves ☐ Safety boots

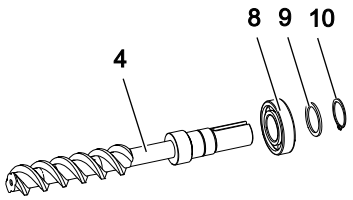

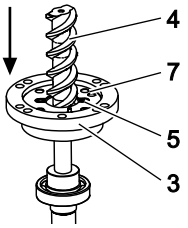

1. Press the ball bearing **8** on the main screw **4** and mount the supporting ring **9** as well as the circlip **10**.
2. Rotate the main screw by 180° and clamp. Ensure that the shaft is not damaged in the process.
3. Slide the flange cover **3** onto the main screw.
4. Clean the fitting surfaces carefully, insert the flat gasket **7** in the flange cover.
5. Position the edge sealing rings **5** in the flange cover. Take the recesses for the edge sealing rings into account.

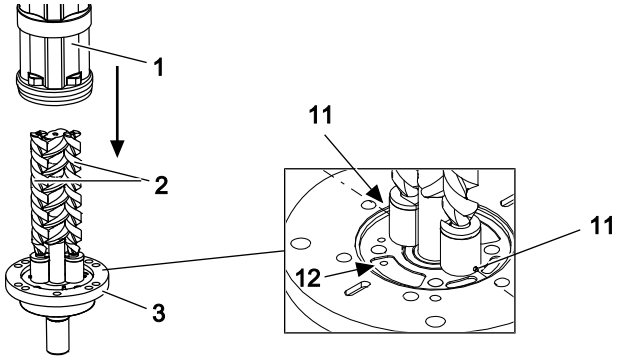

6. Place the idle screws left and right of the main screw, so that the fitting surfaces of the bearing bushes contact the shaft of the main screw and the positioning pins **11** are aligned in one line.
7. Ensure that the adapter sleeve is not damaged during the installation of the pump housing **1**. Take the hole **12** into account.
   Slide the pump housing over the pre-mounted idle screws and main screw.

13 Disposal

13.1 Dismantling and disposing of the pump

Personnel qualification:	☐ Fitter
Personal protective equipment:	☐ Work clothing ☐ Face protection ☐ Protective gloves ☐ Safety boots
Aids:	☐ Solvents or industrial cleaners suitable for the pumped liquid ☐ Collection tank

⚠ WARNING

Danger of poisoning and environmental damage through residues.

- ► Wear personal protective clothing during all the work. Ensure face protection.
- ► Before disposal collect any pumped liquid still present safely and dispose of it in an environmentally compatible manner in accordance with the applicable local regulations.
- ► Before disposing neutralize the residues.

Requirement:

- ✓ Disconnect the pump unit from the power supply and secure it against being switched back on
- ✓ Pump unit cooled down to the ambient temperature and disconnected from the pipe system
- ✓ Pump emptied completely
- ✓ Pump placed at a location suitable for dismantling

1. Dismantle the pump and disassemble it into its individual parts.
2. Clean residues of the pumped liquid from the individual parts.
3. Separate sealing elements made of elastomers and ceramics (SiC) from the pump and dispose of them in separately.
4. Recycle iron parts.

14 Troubleshooting

14.1 Possible faults

Faults can have different causes. The following tables list the symptoms of a fault, the possible causes and measures for troubleshooting.

Identification	Fault
1	No pump suction
2	Delivery rate too low
3	Pump too loud
4	Motor overload
5	Uneven delivery rate
6	Pump has seized
7	Shaft seal leaks

14.2 Troubleshooting

Fault identification							Cause	Remedy
1	–	–	–	–	–	–	Pump suction line closed	
								Check the shut-off devices. If required, open.
1	2	3	–	5	–	–	Parts soiled (filter, suction line, suction valve, strainer)	
								Clean parts.
1	2	3	–	5	–	–	Suction head too high	
								Reduce the level difference. -or- Reduce the line length. -or- Increase the line cross-section. -or- Heat up the pumped liquid. -or- Install a filter / strainer with a larger mesh width. Ensure that the permissible mesh width is not exceeded.
1	–	3	–	–	–	–	Level in the intake container too low	
								Fill the intake container.
1	–	–	–	–	–	–	Too little pumped liquid in the pump	
								Fill the pump with pumped liquid.
1	–	–	–	–	–	–	Incorrect pump direction of rotation	
								Swop the two electrical connection phases Connection, Page 18.
–	–	–	4	–	–	–	Differential pressure too high	
								Reduce the differential pressure.
1	–	3	4	5	–	–	Viscosity of the pumped liquid too high	
								Increase the temperature of the pumped liquid. -or- Decrease the speed.

Fault identification							Cause	Remedy
–	2	–	–	–	–	–	Viscosity of the pumped liquid too low	
								→ Reduce the temperature of the pumped liquid. -or- Increase the speed.
–	2	3	–	5	–	–	Airlock/gas in the pumped liquid	
								1. → Test the pipe system for air admission, replace leaking parts. 2. → Reduce the suction head. -or- Increase the inlet pressure.
–	2	–	4	–	–	–	Speed/frequency/voltage of the motor false	
								1. → Ensure that the motor frequency and voltage match the operating voltage. 2. → Ensure that the speed of the motor matches the rating plate of the pump. If necessary adjust the speed.
–	2	3	–	5	–	–	Overflow valve opens during normal operation	
								→ Set the opening pressure to 110% of the differential pressure ↳ During operation, Page 23.
–	2	–	–	5	–	–	Overflow valve leaks	
								→ Contact the manufacturer.
–	2	–	–	–	–	–	Advanced wear of the housing/screw set	
								→ Contact the manufacturer.
–	–	–	–	–	–	7	Advanced wear of sealing surfaces	
								→ Replace the seal and check the pumped liquid for abrasive substances. If required, replace the filter/strainer. -or- Contact the manufacturer.
–	–	3	–	–	–	–	Coupling aligned incorrectly	
								→ Assemble the coupling and motor correctly ↳ Connection, Page 18
–	–	3	–	–	–	–	Pump subject to mechanical stress	
								→ Connect the pump correctly to the pipe system ↳ Connection, Page 18.
–	–	3	–	–	–	–	Vibrations/pulsations in the system	
								→ Bear the pump unit elastically. -or- Make the connections with hoses.
–	–	3	–	–	–	–	Flow speed in the pressure line or suction line too high	
								→ Set the flow speed in the pressure line so that it does not exceed 3 m/s. -or- Set the flow speed in the suction line so that it does not exceed 1 m/s. -or- Contact the manufacturer.
–	–	3	4	–	–	7	Ball bearing damaged	
								→ Replace the ball bearing ↳ Servicing, Page 27.
–	2	3	4	–	–	7	Superficial damage to pump parts coming into contact with the liquid	
								→ Contact the manufacturer.
–	–	–	–	–	–	7	Shaft seal damaged through dry running	
								→ Replace the shaft seal ↳ Servicing, Page 27.
–	–	–	–	–	–	7	Inlet pressure too high	
								1. → Reduce the inlet pressure at the system side. 2. → Replace the shaft seal ↳ Servicing, Page 27.
–	–	–	–	–	–	7	Inlet pressure too low	
								→ Install a non-return valve at the pressure side.
–	–	–	–	–	–	7	Shaft seal is overloaded through thermal/chemical influences	
								1. → Check the maximum operating temperature.

Fault identification							Cause	Remedy
								2. ▶ Check the suitability and resistance of the elastomers with regard to the pumped liquid. -or- Contact the manufacturer.
–	–	–	–	–	–	7	Overload of the shaft seal by pressure build-up during the heating process	
								▶ Open the pressure-side/suction-side shut-off device in order to avoid a pressure build-up through heat expansion of the pumped liquid.
1	2	3	4	5	–	–	Cold start when delivering high-viscosity liquids	
								▶ Install the heating system.
–	–	–	4	–	–	7	Foreign bodies in the pump	
								▶ Contact the manufacturer.
–	–	–	–	–	–	7	Differential pressure is too high and has overloaded the idle screws	
								▶ Contact the manufacturer.
–	–	–	–	–	–	7	Viscosity is too low and has overloaded the idle screws	
								▶ Contact the manufacturer.
1	2	3	4	–	–	7	Pump damaged through dry running	
								▶ Contact the manufacturer.
1	–	–	–	–	–	–	Pump does not vent	
								▶ Vent the pressure line at the highest point.

Tab. 12: Fault table

15 Spare parts

15.1 Overview

Model/Size	Type	Variant	Internal
CK 5 – 880	Maintenance kit	Standard radial shaft seal	OPW 36
CK 5 – 880	Repair kit	Overflow valve	OPR 09
CK 5 – 880	Tool set	Radial shaft seal	OPR 07

Tab. 13: Overview of spare parts

15.2 Maintenance kits

15.2.1 Standard or high-temperature radial shaft seal maintenance kit

Note The maintenance kit contains only the numbered parts and is only supplied complete.

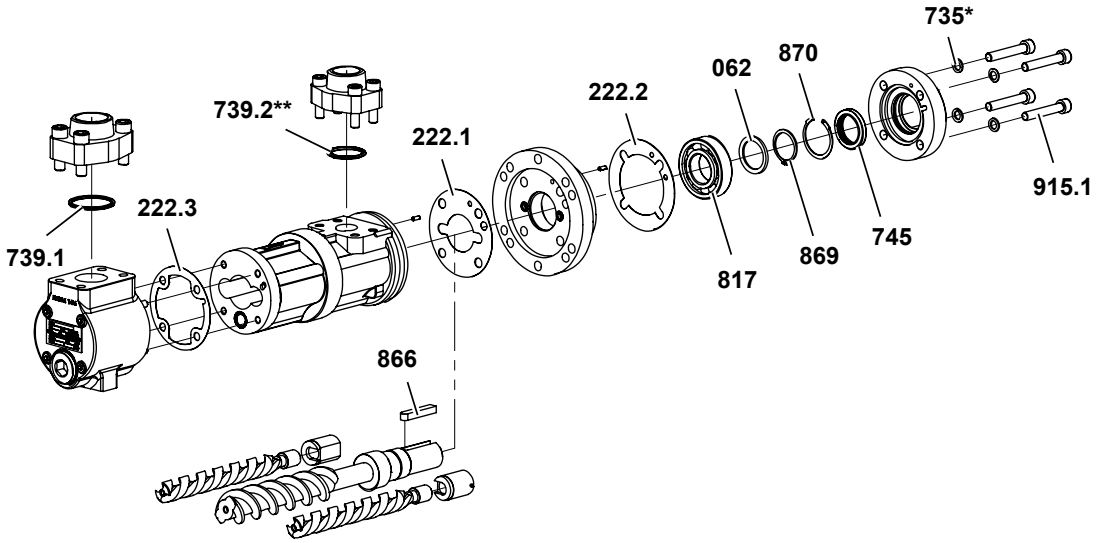

Qty.	Item no.	Part	Qty.	Item no.	Part
1	**062**	Spacer	1	**745**	Radial shaft seal
1	**222.1**	Flat gasket	1	**817**	Ball bearing
1	**222.2**	Flat gasket	1	**866**	Feather key
1	**222.3**	Flat gasket	1	**869**	Circlip
4	**735***	Copper seal	1	**870**	Circlip
1	**739.1**	O-ring suction-side	4	**915.1**	Cylinder screw
1	**739.2****	O-ring pressure-side	1		MoS_2 paste 15 g
	*	For size 55 – 85 only			
	**	For size 15 – 880 only			

Tab. 14: Standard radial shaft seal maintenance kit

15.3 Repair kits

15.3.1 Repair kit, overflow valve

Note The repair kit contains only the numbered parts and is only supplied complete.

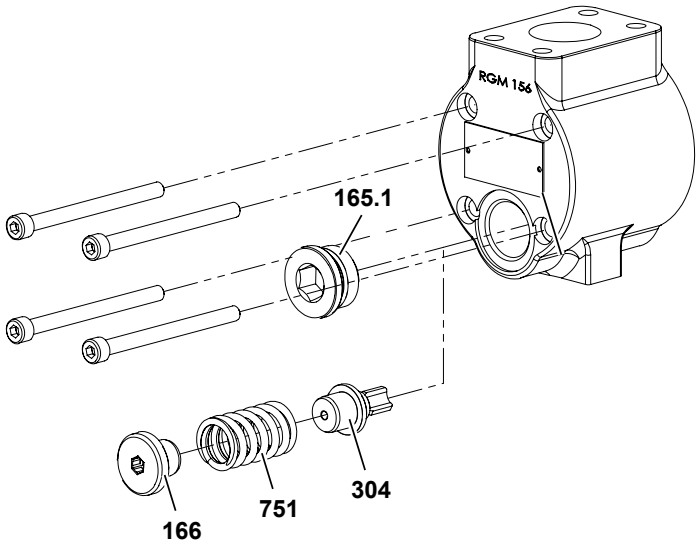

Qty.	Item no.	Part	Qty.	Item no.	Part
1	**165.1**	Screw plug	1	**304**	Valve cone
1	**166**	Adjusting screw	1	**751**	Pressure spring

Tab. 15: Repair kit, overflow valve

15.4 Attachment parts

15.4.1 Overview of accessories

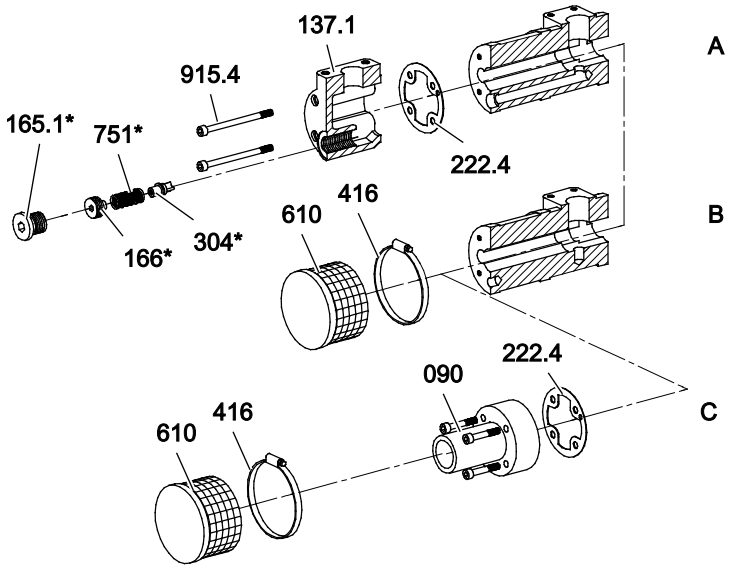

A Suction housing
B Suction strainer
C Suction pipe

Qty.	Item no.	Part	Qty.	Item no.	Part
1	**090**	Suction cover (suction pipe connection)	1	**304***	Valve cone
1	**137.1**	Suction housing	1	**416**	Pipe clamp
1	**165.1***	Screw plug	1	**610**	Suction strainer
1	**166***	Adjusting screw	1	**751***	Pressure spring
1	**222.4**	Flat gasket	2	**915.4**	Cylinder screw
1		Silicone grease 1 g			
*		Parts are included in the overflow valve repair kit.			

Tab. 16: Spare parts attachments

15.5 Tool sets

15.5.1 Tool set, radial shaft seal

	Qty.	Part
	1	Mounting arbour radial shaft seal ring
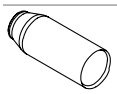	1	Mounting sleeve main screw

16 Appendix

16.1 Tightening torques for screws with metric screw threads with and without wedge lock washers

Note In the case of galvanised screw plugs and screw plugs made of stainless steel the inner thread and outer thread have to be greased thorough before mounting in order to prevent threads from seizing.

Note The manufacturer recommends tightening screws with wedge lock washers according to the table three times after another with the same tightening torque

Tightening torque [Nm]							
Screws with head contact surface							Countersunk screws
					Stainless steel screws A2 and A4		
Thread	5.6	8.8	10.9	8.8+ Alu*	Property class 70	Property class 80	8.8
M 3	0.6	1.5	–	1.2	1.1	1.3	1.0
M 4	1.4	3.0	4.1	2.3	2.0	2.3	2.0
M 5	2.7	6.0	8.0	4.8	3.9	4.7	5.0
M 6	4.7	10.3	14.0	7.6	6.9	8.0	9.0
M 8	11.3	25.0	34.0	18.4	17.0	22.0	14.0
M 10	23.0	47.0	68.0	36.8	33.0	43.0	36.0
M 12	39.0	84.0	117	64.0	56.0	75.0	60.0
M 14	62.0	133	186	101	89.0	–	90.0
M 16	96.0	204	285	155	136	180	100
M 18	133	284	390	224	191	–	–
M 20	187	399	558	313	267	370	135
M 24	322	687	960	540	460	605	360

Tab. 17: Tightening torques metric screw thread

*When screwing into aluminium, the tightening torque reduces by 20 % when the screw-in depth is less than double the thread diameter.

16.2 Tightening torques for screw plugs with thread measured in inches and elastomer seal

Note In the case of galvanised screw plugs and screw plugs made of stainless steel the inner thread and outer thread have to be greased thorough before mounting in order to prevent threads from seizing.

Tightening torque [Nm]	
Thread	Galvanized + stainless steel
G 1/8"	13.0
G 1/4"	30.0
G 3/8"	60.0
G 1/2"	80.0
G 3/4"	120
G 1"	200
G 1 1/4"	400
G 1 1/2"	450

Tab. 18: Tightening torques with thread measured in inches

16.3 Contents of the Declaration of Conformity

The products described in these instructions are machinery in the sense of the Directive 2006/42/EC. The original of the EC Declaration of Conformity is enclosed with the machinery at delivery.

The machinery fulfils all the relevant provisions of the following directives:

Number	Name	Remark
2006/42/EC	Machinery Directive	–
2014/68/EU	Pressure Equipment Directive	–
2014/30/EU	Directive on Electromagnetic Compatibility	Only for machinery with electrical components
2014/35/EU	Low Voltage Directive	Only for machinery with electrical components
2014/34/EU	Directive on Use in Potentially Explosive Areas (ATEX)	Only for machinery in ATEX version

Tab. 19: Directives observed

KRAL

KRAL GmbH, 6890 Lustenau, Austria, Tel.: +43/5577/86644-0, E-Mail: kral@kral.at | www.kral.at